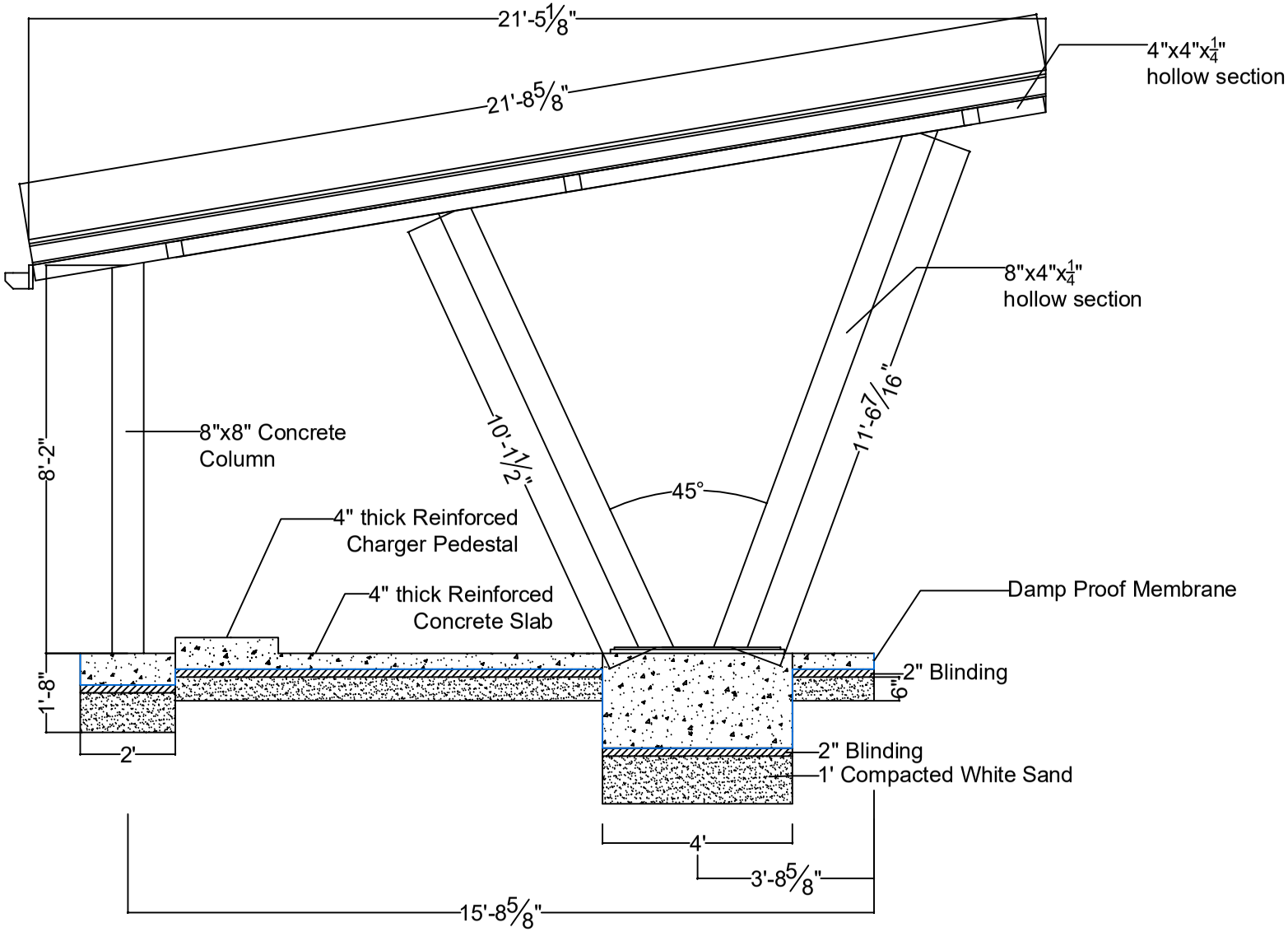

Side Elevation

Guyana Energy Agency 295 QUAMINA STREET, GEORGETOWN ENERGY & ENERGY STATISTIC DIVISION	***PROJECT:*** ***Construction of carport at: LOT 2- Mahaicony Technical and Vocational Training Centre, Region 5.***	***Name: Eastern Elevation of Carport***	
		Drawn by: D. Shiwcharan	***Scale: N/A***	***CAD File:***
		Survey by:	***Date: 2025-06-18***	***DWG No. : 2***
		Approved by:	***Revised by:***	***Sheet No. : 2 of 6***